FEATURES

- **Few External Components Required (As Few As Six)**
- **Current Limit, Undervoltage Lockout, and Thermal Shutdown**
- **Wide Input Voltage Range: 3 V to 40 V**
- **100-kHz Internal Oscillator Allows for Use of Small Magnetics**
- **Current-Mode Operation for Faster Transient Response, Line Regulation, and Cycle-by-Cycle Current Limiting**
- **Soft-Start Capability Provides Controlled Startup Current**
- **Improved Replacement for LM2577 Series**

APPLICATIONS

- **Simple Boost Converter**
- **Flyback Converters, Single/Multiple Outputs**
- **SEPIC Converter With V_{IN} Higher or Lower Than Output Voltage**
- **Transformer-Coupled Forward Converters**

KTT (TO-263) PACKAGE
(TOP VIEW)

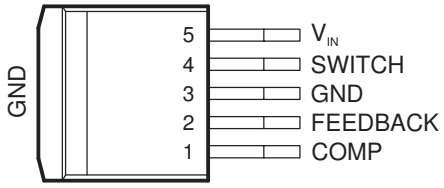

DESCRIPTION/ORDERING INFORMATION

The TL3577 series are easy-to-use devices that incorporate all the active circuitry required to implement either step-up (boost), flyback, forward converter, or SEPIC converter switching regulators. The internal 3-A 65-V switch allows the TL3577 to provide an output voltage of up to 60 V as a simple boost regulator; higher output voltages can be achieved with the TL3577 configured as a flyback or forward converter.

Requiring few external components, The TL3577 features a wide input voltage range of 3 V to 40 V and offers an adjustable output voltage. Basic protection features include undervoltage lockout, thermal protection, and soft start, which is provided to reduce input current during startup. Current-mode control provides cycle-by-cycle current limiting, as well as faster line and load regulation. The internal 100-kHz oscillator allows for use of smaller magnetics and filter components, when compared with similar regulators running at 52 kHz. A standard series of inductors and capacitors optimized for use with these regulators is available from several manufacturers and are listed in this data sheet.

The TL3577 is characterized for operation over the virtual junction temperature range of –40°C to 125°C.

ORDERING INFORMATION

T_J	V_O (NOM)	PACKAGE(1)		ORDERABLE PART NUMBER	TOP-SIDE MARKING
–40°C to 125°C	ADJ	TO-263 – KTT	Reel of 500	TL3577-ADJIKTTR	TL3577ADJI

(1) Package drawings, standard packing quantities, thermal data, symbolization, and PCB design guidelines are available at www.ti.com/sc/package.

Please be aware that an important notice concerning availability, standard warranty, and use in critical applications of Texas Instruments semiconductor products and disclaimers thereto appears at the end of this data sheet.

PRODUCTION DATA information is current as of publication date. Products conform to specifications per the terms of the Texas Instruments standard warranty. Production processing does not necessarily include testing of all parameters.

Copyright © 2006, Texas Instruments Incorporated

FUNCTIONAL BLOCK DIAGRAM

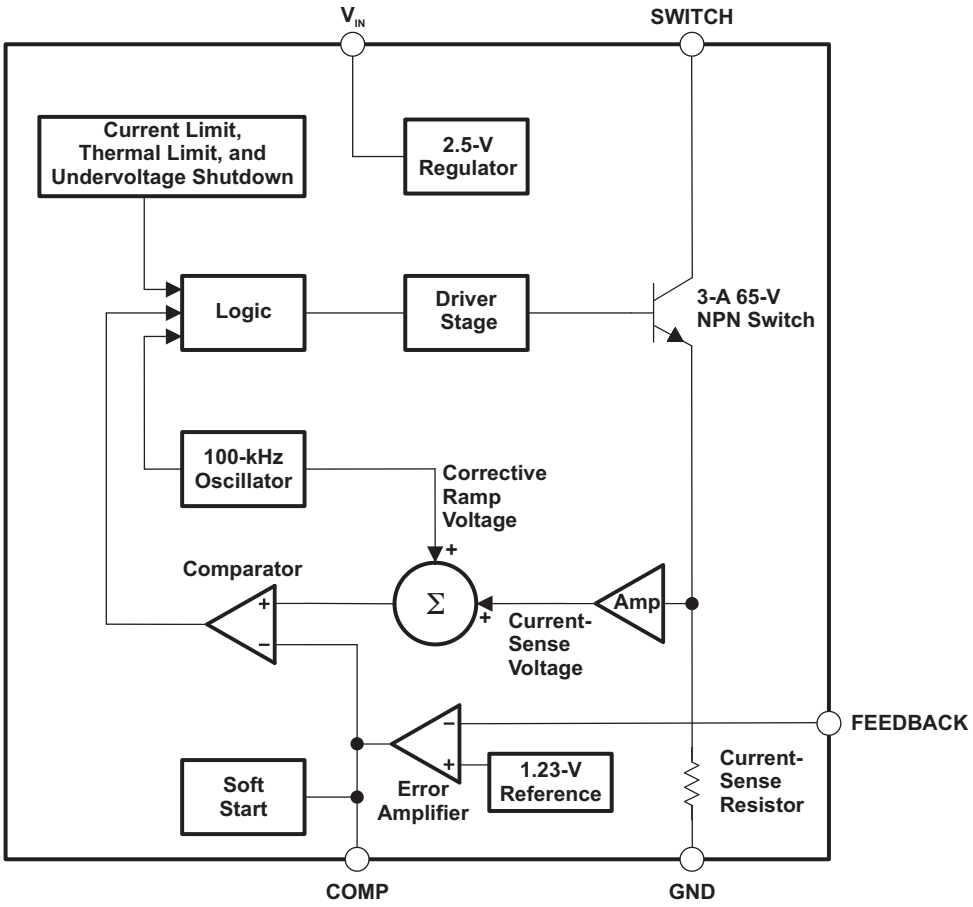

Absolute Maximum Ratings(1)

over operating free-air temperature range (unless otherwise noted)

		MIN	MAX	UNIT
V_{IN}	Supply voltage		45	V
V_{SW}	Output SWITCH voltage		65	V
I_{SW}	Output SWITCH current		6	A
T_J	Maximum junction temperature		150	°C
T_{stg}	Storage temperature range	–65	150	°C
T_J	Junction temperature		150	°C

(1) Stresses beyond those listed under "absolute maximum ratings" may cause permanent damage to the device. These are stress ratings only, and functional operation of the device at these or any other conditions beyond those indicated under "recommended operating conditions" is not implied. Exposure to absolute-maximum-rated conditions for extended periods may affect device reliability.

Package Thermal Data(1)

PACKAGE	BOARD	θ_{JA}	θ_{JC}	θ_{JCB}
TO-263 (KTT)	High K, JESD 51-5	31.8	35.0	1.13

(1) Maximum power dissipation is a function of $T_J(max)$, θ_{JA}, and T_A. The maximum allowable power dissipation at any allowable ambient temperature is $P_D = (T_J(max) – T_A)/\theta_{JA}$. Operating at the absolute maximum T_J of 150°C can affect reliability.

Recommended Operating Conditions

over operating free-air temperature range (unless otherwise noted)

		MIN	MAX	UNIT
V_{IN}	Supply voltage	3	40	V
V_{SW}	Output SWITCH voltage	0	60	V
I_{SW}	Output SWITCH current		3	A
T_J	Operating virtual junction temperature	–40	125	°C

Electrical Characteristics

V_{IN} = 5 V, $V_{FEEDBACK}$ = V_{REF}, I_{SWITCH} = 0 (unless otherwise noted)

PARAMETER		TEST CONDITIONS	T_J	TL3577-ADJ			UNIT
				MIN	TYP	MAX	
V_{OUT}	Output voltage	V_{IN} = 5 V to 10 V, I_{LOAD} = 100 mA to 800 mA, See Figure 1	25°C	11.6	12	12.4	V
			Full range	11.4		12.6	
$\frac{\Delta V_{OUT}}{\Delta V_{IN}}$	Line regulation	V_{IN} = 3.5 V to 10 V, I_{LOAD} = 200 mA, See Figure 1	25°C		20	50	mV
			Full range			100	
$\frac{\Delta V_{OUT}}{\Delta I_{LOAD}}$	Load regulation	I_{LOAD} = 100 mA to 800 mA, See Figure 1	25°C		20	50	mV
			Full range			100	
η	Efficiency	I_{LOAD} = 800 mA, See Figure 1	25°C		80		%
I_{CC}	Input supply current	$V_{FEEDBACK}$ = 1.5 V (SWITCH Off)	25°C		7.5	10	mA
			Full range			14	
		I_{SWITCH} = 2 A, V_{COMP} = 2 V (maximum duty cycle)	25°C		45	70	
			Full range			85	
V_{UV}	Input supply undervoltage lockout	I_{SWITCH} = 100 mA	25°C		2.7	2.85	V
			Full range			2.95	
f_O	Oscillator frequency	Measured at SWITCH, I_{SWITCH} = 100 mA	25°C	85	100	115	kHz
			Full range	80		120	
V_{REF}	Reference voltage	Measured at FEEDBACK, V_{IN} = 3 V to 40 V, V_{COMP} = 1 V	25°C	1.214	1.23	1.246	V
			Full range	1.206		1.254	
$\frac{\Delta V_{REF}}{\Delta V_{IN}}$	Reference voltage line regulation	V_{IN} = 3 V to 40 V	25°C		0.5		mV
I_B	Error amplifier input bias current	V_{COMP} = 1 V	25°C		100	300	nA
			Full range			800	
G_M	Error amplifier transconductance	I_{COMP} = –30 µA to 30 µA, V_{COMP} = 1 V	25°C	2400	3700	4800	µmho
			Full range	1600		5800	
A_{VOL}	Error amplifier voltage gain	V_{COMP} = 1.1 V to 1.9 V, R_{COMP} = 1 MΩ(1)	25°C	500	800		V/V
			Full range	250			
	Error amplifier output swing	Upper limit, $V_{FEEDBACK}$ = 1 V	25°C	2.2	2.4		V
			Full range	2			
		Lower limit, $V_{FEEDBACK}$ = 1.5 V	25°C		0.3	0.4	
			Full range			0.55	
	Error amplifier output current	$V_{FEEDBACK}$ = 1 V to 1.5 V, V_{COMP} = 1 V	25°C	±130	±200	±300	µA
			Full range	±90		±400	
I_{SS}	Soft-start current	$V_{FEEDBACK}$ = 1 V, V_{COMP} = 0	25°C	2.5	5	7.5	µA
			Full range	1.5		9.5	
D	Maximum duty cyle	V_{COMP} = 1.5 V, I_{SWITCH} = 100 mA	25°C	88	90		%
			Full range	84			
$\frac{\Delta I_{SWITCH}}{\Delta V_{COMP}}$	Switch transconductance		25°C		12.5		A/V
I_L	Switch leakage current	V_{SWITCH} = 65 V, $V_{FEEDBACK}$ = 1.5 V (SWITCH off)	25°C		10	300	µA
			Full range			600	
V_{SAT}	Switch saturation voltage	I_{SWITCH} = 2 A, V_{COMP} = 2 V (maximum duty cycle)	25°C		0.5	0.7	V
			Full range			0.9	
	NPN switch current limit	V_{COMP} = 2 V	25°C	3.7	4.3	5.3	A
			Full range	3		6	

(1) A 1-MΩ resistor is connected to the compensation pin (which is the error amplifier output) to ensure accuracy in measuring A_{VOL}. In actual applications, this load resistance should be ≥10 MΩ, resulting in A_{VOL} that is typically twice the specified minimum limit.

Electrical Characteristics (continued)

V_{IN} = 5 V, $V_{FEEDBACK}$ = V_{REF}, I_{SWITCH} = 0 (unless otherwise noted)

PARAMETER	TEST CONDITIONS	T_J	TL3577-ADJ			UNIT
			MIN	TYP	MAX	
COMP current	V_{COMP} = 0 V	25°C		25	40	µA
		Full range			50	

TYPICAL CHARACTERISTICS

REFERENCE VOLTAGE vs TEMPERATURE

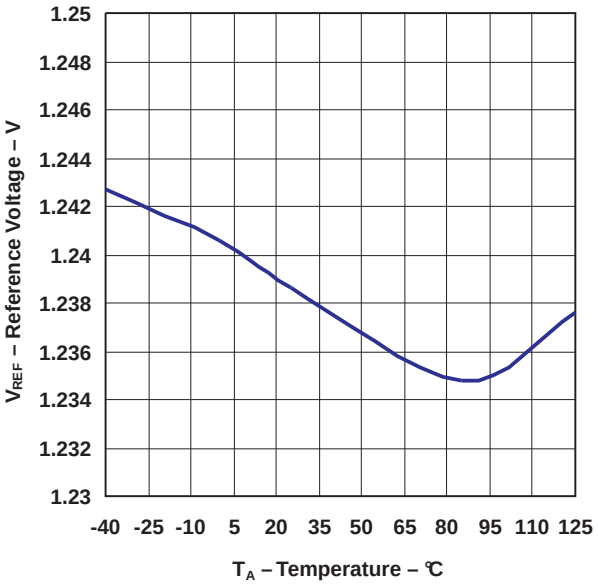

Δ REFERENCE VOLTAGE vs SUPPLY VOLTAGE

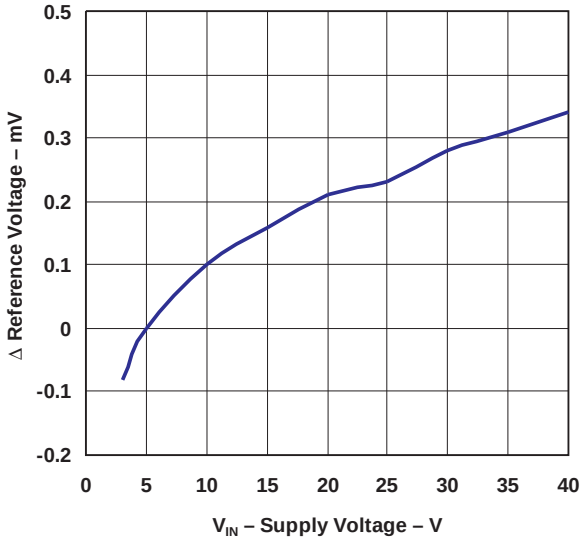

ERROR AMPLIFIER TRANSCONDUCTANCE vs TEMPERATURE

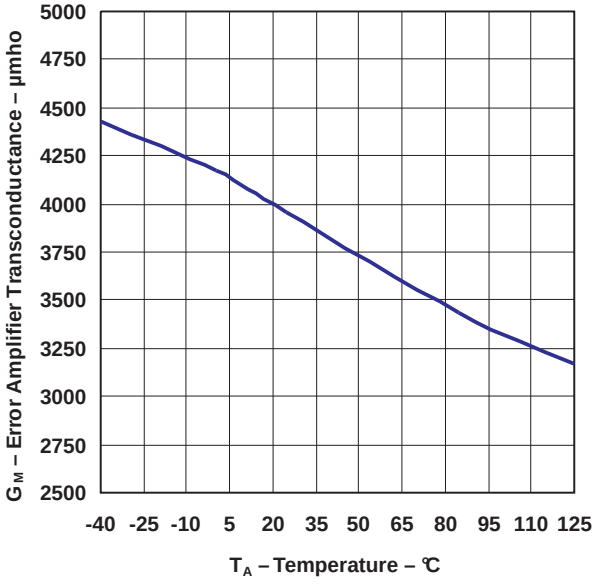

ERROR AMPLIFIER VOLTAGE GAIN vs TEMPERATURE

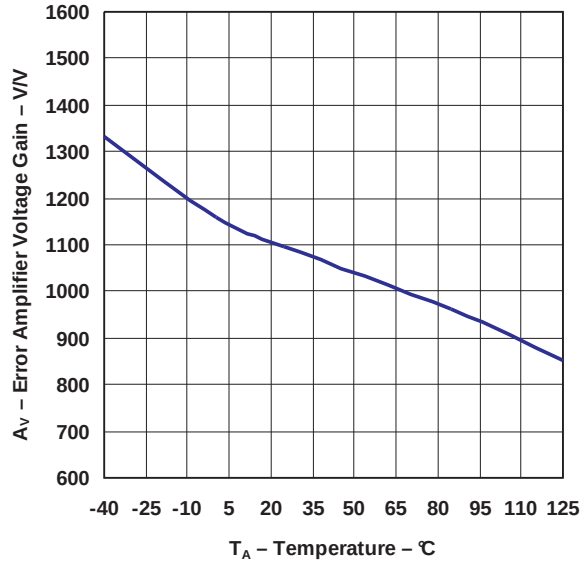

TYPICAL CHARACTERISTICS (continued)

QUIESCENT CURRENT vs TEMPERATURE

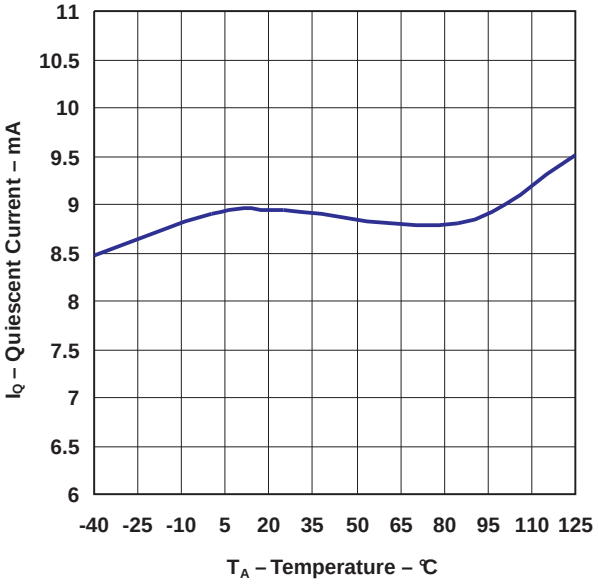

SWITCH CURRENT LIMIT vs TEMPERATURE

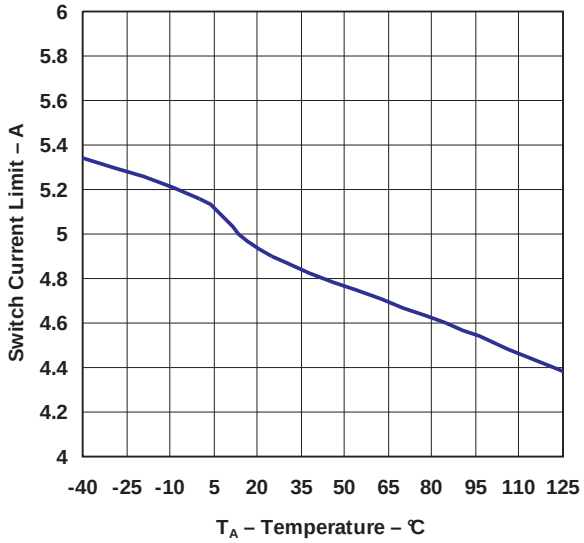

FEEDBACK BIAS CURRENT vs TEMPERATURE

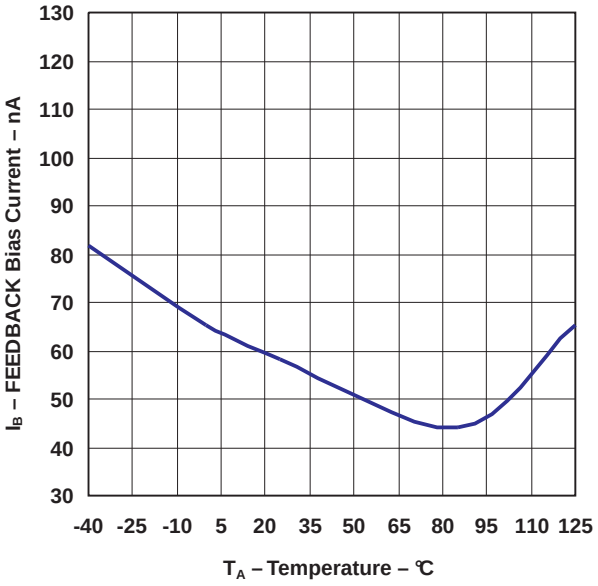

OSCILLATOR FREQUENCY vs TEMPERATURE

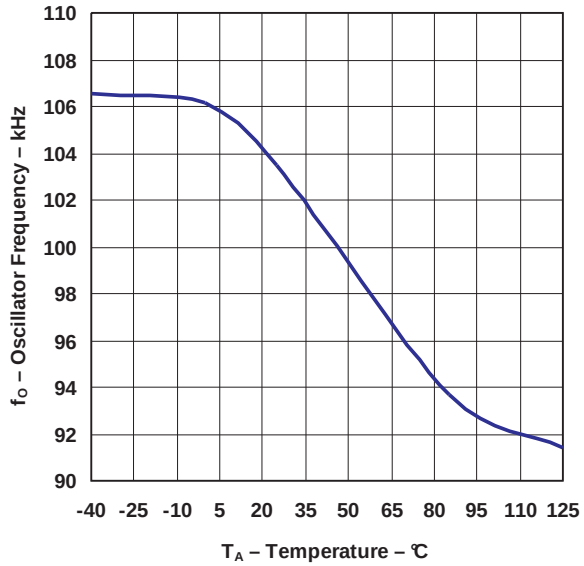

TYPICAL CHARACTERISTICS (continued)

SWITCH SATURATION VOLTAGE vs TEMPERATURE

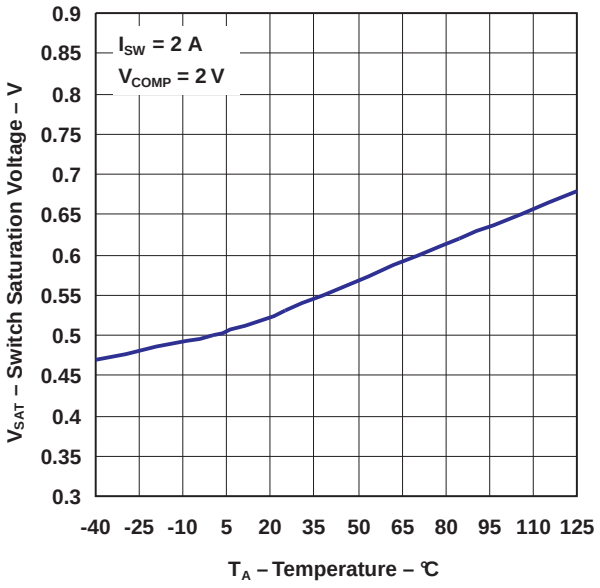

PARAMETER MEASUREMENT INFORMATION

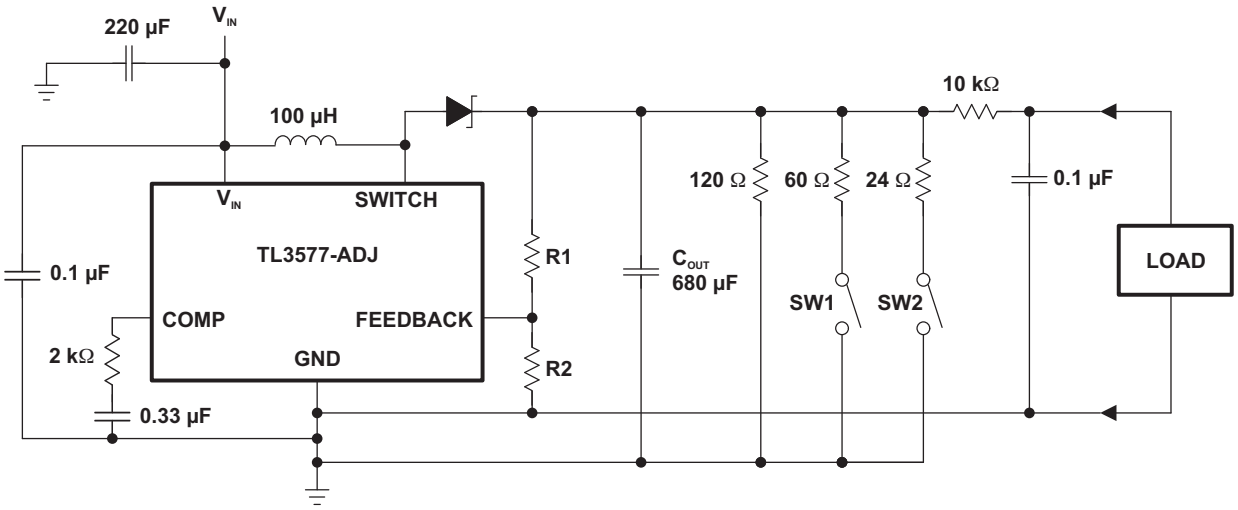

A. R1 = 48.7 kΩ in series with 511 Ω

B. R2 = 5.62 kΩ (1%)

Figure 1. Test Circuit

APPLICATION INFORMATION

Figure 2 shows a typical application of the TL3577 in a boost regulator.

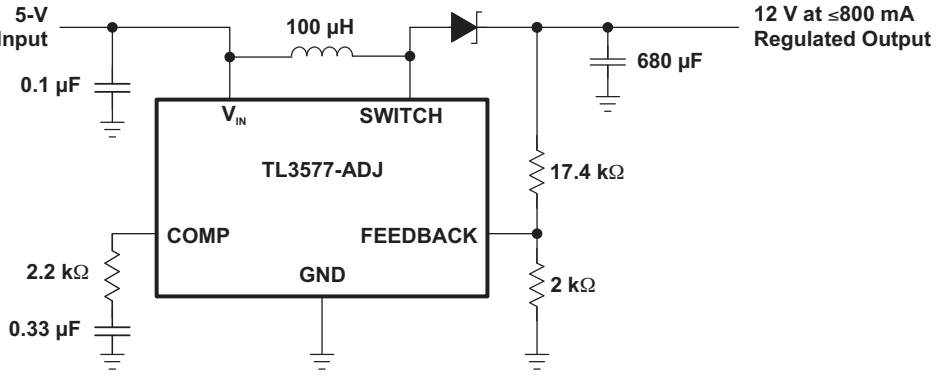

Figure 2. Typical Application – Boost Regulator

Figure 3 shows a typical application of the TL3577 in a flyback regulator.

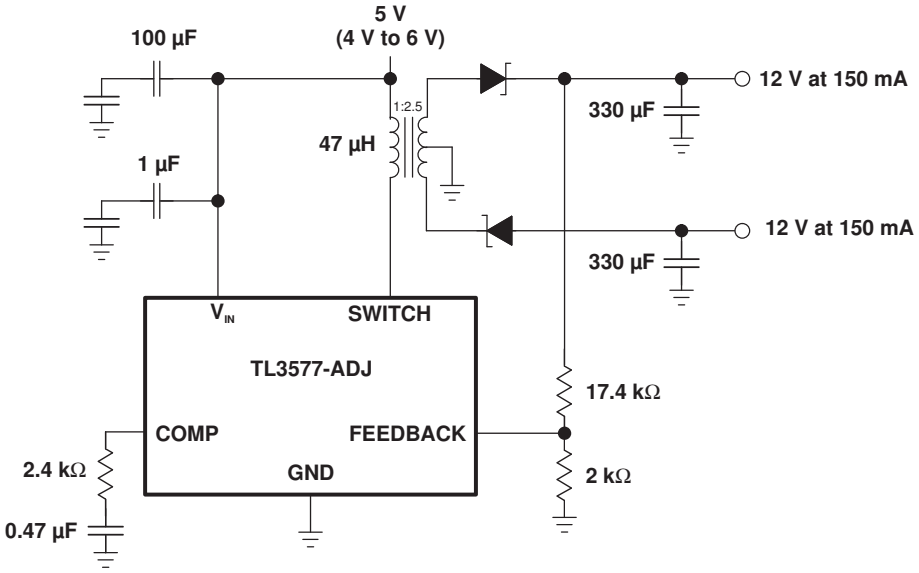

Figure 3. Typical Application – Flyback Regulator

APPLICATION INFORMATION (continued)

Figure 4 shows a typical application of the TL3577 in a SEPIC regulator.

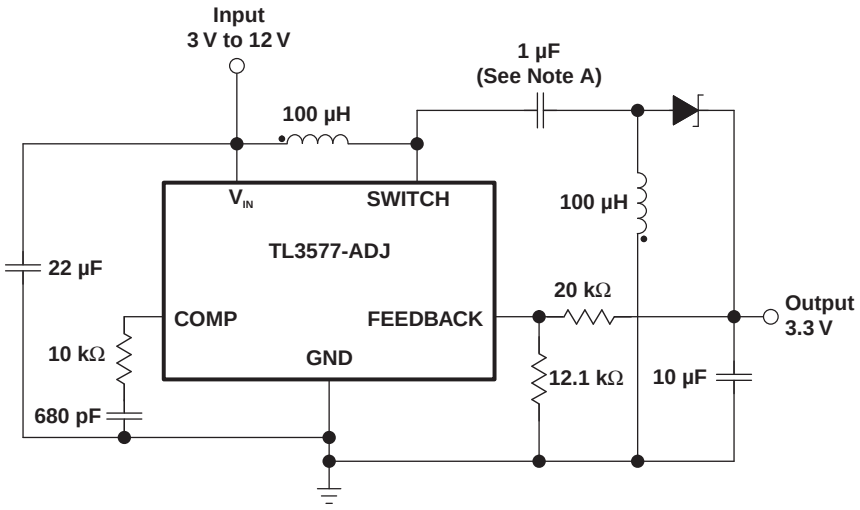

A. Low ESR. Voltage rating must be at least $V_{IN} + V_{OUT}$.

Figure 4. Typical Application – SEPIC Regulator

APPLICATION INFORMATION (continued)

Step-Up (Boost) Regulator

Figure 2 shows a step-up switching regulator utilizing the TL3577. The regulator produces an output voltage higher than the input voltage. The TL3577 turns its switch on and off at a fixed frequency of 100 kHz, thus storing energy in the inductor (L). When the NPN switch is on, the inductor current is charged at a rate of V_{IN}/L. When the switch is off, the voltage at the SWITCH terminal of the inductor rises above V_{IN}, discharging the stored current through the output diode (D) into the output capacitor (C_{OUT}) at a rate of $(V_{OUT} – V_{IN})/L$. The energy stored in the inductor is thus transferred to the output. The output voltage is controlled by the amount of energy transferred, which is controlled by modulating the peak inductor current. This modulation is accomplished by feeding a portion of the output voltage to an error amplifier that amplifies the difference between the feedback voltage and an internal 1.23-V precision reference voltage. The output of the error amplifier is compared to a voltage that is proportional to the switch current or the inductor current during the switch-on time. A comparator terminates the switch-on time when the two voltages are equal and, thus, controls the peak switch current to maintain a constant output voltage. Figure 5 shows voltage and current waveforms for the circuit. Formulas for calculation are shown in Table 1.

Step-Up Regulator Design Procedure

Given:

$V_{IN(min)}$ = Minimum input supply voltage
V_{OUT} = Regulated output voltage

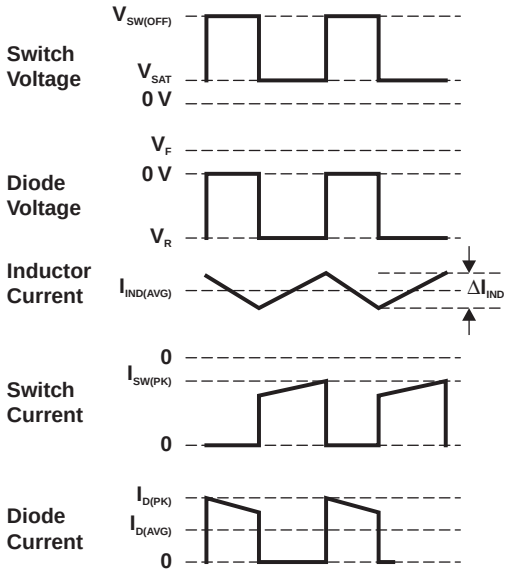

Figure 5. Step-Up Regulator Waveforms

Table 1. Step-up Regulator Formulas(1)

Duty cycle	D	$\frac{V_{OUT} + V_F - V_{IN}}{V_{OUT} + V_F - V_{SAT}} \approx \frac{V_{OUT} - V_{IN}}{V_{OUT}}$
Average inductor current	$I_{IND(AVG)}$	$\frac{I_{LOAD}}{1 - D}$
Inductor current ripple	ΔI_{IND}	$\frac{V_{IN} - V_{SAT}}{L} \bullet \frac{D}{100{,}000}$
Peak inductor current	$I_{IND(PK)}$	$\frac{I_{LOAD}}{1 - D} + \frac{\Delta I_{IND}}{2}$
Peak switch current	$I_{SW(PK)}$	$\frac{I_{LOAD}}{1 - D} + \frac{\Delta I_{IND}}{2}$
Switch voltage when off	$V_{SW(OFF)}$	$V_{OUT} + V_F$
Diode reverse voltage	V_R	$V_{OUT} - V_{SAT}$
Average diode current	$I_{D(AVG)}$	I_{LOAD}
Peak diode current	$I_{D(PK)}$	$\frac{I_{LOAD}}{1 - D} + \frac{\Delta I_{IND}}{2}$
Power dissipation	P_D	$0.25\ \Omega \left(\frac{I_{LOAD}}{1 - D}\right)^2 D + \frac{I_{LOAD} \bullet D \bullet V_{IN}}{50\ (1 - D)}$

(1) V_F = forward-biased diode voltage, I_{LOAD} = output load

First, determine if the TL3577 can provide these values of V_{OUT} and $I_{LOAD(max)}$ when operating with the minimum value of V_{IN}. The upper limits for V_{OUT} and $I_{LOAD(max)}$ are given by the following equations.

$V_{OUT} \le 60$ V and

$V_{OUT} \le 10 \times V_{IN}$

$I_{LOAD(max)} \le (2.1\ A \times V_{IN(min)})/V_{OUT}$

These limits must be greater than or equal to the values specified in this application.

1. Output Voltage Section

Resistors R1 and R2 are used to select the desired output voltage. These resistors form a voltage divider and present a portion of the output voltage to the error amplifier, which compares it to an internal 1.23-V reference. Select R1 and R2 such that:

$R1/R2 = (V_{OUT}/1.23\ V) - 1$

2. Inductor Selection (L)

A. Preliminary Calculations

To select the inductor, the calculation of the following three parameters is necessary:

D_{max}, the maximum switch duty cycle ($0 \le D \le 0.9$):

$Dmax = V_{OUT} + V_F - V_{IN(min)}/V_{OUT} + V_F - 0.6$ V

where, typically, $V_F = 0.5$ V for Schottky diodes and $V_F = 0.8$ V for fast-recovery diodes.

E • T, the product of volts • time that charges the inductor:

$E \bullet T = D_{max} \times (V_{IN(min)} - 0.6V)10^6/100{,}000$ Hz (Vμs)

$I_{IND,DC}$, the average inductor current under full load:

$I_{IND,DC} = (1.05 \times I_{LOAD(max)})/(1 - D_{max})$

B. Identify Inductor Value

1. From Figure 6, identify the inductor code for the region indicated by the intersection of E • T and $I_{IND,DC}$. This code gives the inductor value in microhenries. The L or H prefix signifies whether the inductor is rated for a maximum E • T of 90 Vμs (L) or 250 Vμs (H).
2. If D < 0.85, go to step C. If D ≥ 0.85, calculate the minimum inductance needed to ensure the switching regulator's stability:

   If L_{min} is smaller than the inductor values found in step B1, go on to step C. Otherwise, the inductor value found in step 1, above, is too low; an appropriate inductor code should be obtained from Figure 6 as follows:
   a. Find the lowest-value inductor that is greater than L_{min}.
   b. Find where E • T intersects this inductor value to determine if it has an L or H prefix. If E • T intersects both the L and H regions, select the inductor with an H prefix.

C. Inductor Selection

Select an inductor from Table 2 which cross references the inductor codes to the part numbers of the three different manufacturers. The inductors listed in Table 2 have the following characteristics:

AIE (ferrite, pot-core inductors): Benefits of this type are low electromagnetic interference (EMI), small physical size, and very low power dissipation (core loss).

Pulse (powdered iron, toroid core inductors): Benefits are low EMI and ability to withstand E • T and peak current above rated value better than ferrite cores.

Renco (ferrite, bobbin-core inductors): Benefits are low cost and best ability to withstand E • T and peak current above rated value. Be aware that these inductors generate more EMI than the other types, and this may interfere with signals sensitive to noise.

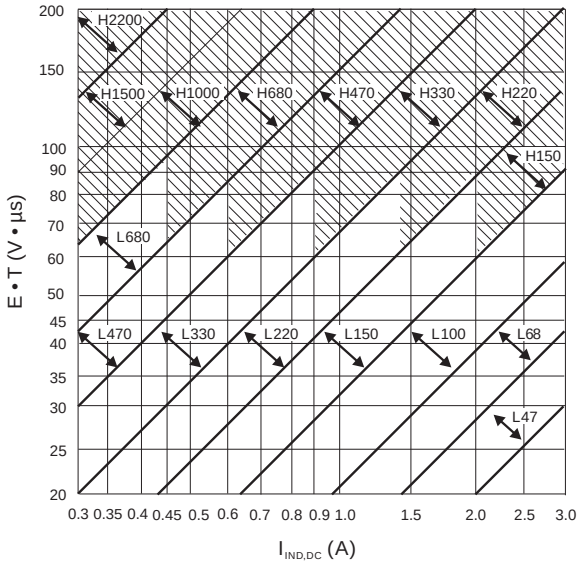

A. This chart assumes that the inductor ripple current inductor is approximately 20% to 30% of the average inductor current (when the regulator is under full load). Greater ripple current causes higher peak switch currents and greater output ripple voltage. Lower ripple current is achieved with larger value inductors. The factor of 20% to 30% is chosen as a convenient balance between the two extremes.

Figure 6. Inductor Selection Graph

Table 2. Standardized Inductors and Manufacturer's Part Numbers

Inductor Code	Manufacturer's Part Number		
	AIE(1)	Pulse(2)	Renco(3)
L47	415 - 0932	PE - 53112	RL2442
L68	415 - 0931	PE - 92114	RL2443
L100	415 - 0930	PE - 92108	RL2444
L150	415 - 0953	PE - 53113	RL1954
L220	415 - 0922	PE - 52626	RL1953
L330	415 - 0926	PE - 52627	RL1952
L470	415 - 0927	PE - 53114	RL1951
L680	415 - 0928	PE - 52629	RL1950
H150	415 - 0936	PE - 53115	RL2445
H220	430 - 0636	PE - 53116	RL2446
H330	430 - 0635	PE - 53117	RL2447
H470	430 - 0634	PE - 53118	RL1961
H680	415 - 0935	PE - 53119	RL1960
H1000	415 - 0934	PE - 53120	RL1959
H1500	415 - 0933	PE - 53121	RL1958
H2200	415 - 0945	PE - 53122	RL2448

(1) AIE Magnetics, Div. Vernitron Corp., (813) 347-2181 2801 72nd Street North, St. Petersburg, FL 33710
(2) Pulse Engineering, (619) 674-8100 12220 World Trade Drive, San Diego, CA 92128
(3) Renco Electronics, Inc., (516) 586-5566 60 Jeffryn Blvd. East, Deer Park, NY 11729

3. Compensation Network (R_C, C_C) and Output Capacitor (C_{OUT}) Selection

The compensation network consists of resistor R_C and capacitor C_C, which form a simple pole-zero network and stabilize the regulator. The values of R_C and C_C depend upon the voltage gain of the regulator, $I_{LOAD(max)}$, the inductor L, and output capacitance C_{OUT}. A procedure to calculate and select the values for R_C, C_C, and C_{OUT} that ensures stability is described below. It should be noted, however, that this may not result in optimum compensation. To guarantee optimum compensation, a standard procedure for testing loop stability is recommended, such as measuring V_{OUT} transient responses to pulsing I_{LOAD}.

A. Calculate the maximum value for R_C.

$R_C \leq (750 \times I_{LOAD(max)} \times V_{OUT}^2)/V_{IN(min)}^2$

Select a resistor less than or equal to this value, not to exceed 3 kΩ.

B. Calculate the minimum value for C_{OUT} using the following two equations.

$C_{OUT} \geq (0.19 \times L \times R_C \times I_{LOAD(max)})/(V_{IN(min)} \times V_{OUT})$ and

$C_{OUT} \geq (V_{IN(min)} \times R_C \times (V_{IN(min)} + (3.74 \times 10^5 \times L))/(487{,}800 \times V_{OUT}^3)$

The larger of these two values is the minimum value that ensures stability.

C. Calculate the minimum value of C_C.

$C_C \geq 58.5 \times V_{OUT}^2 \times C_{OUT} \times R_C^2 \times V_{IN(min)}$

The compensation capacitor also is used in the soft-start function of the regulator. When the input voltage is applied to the part, the switch duty cycle is increased slowly at a rate defined by the compensation capacitor and the soft-start current, thus eliminating high input currents. Without the soft-start circuitry, the switch duty cycle would instantly rise to about 90% and draw large currents from the input supply. For proper soft starting, the value for C_C should be equal to or greater than 0.22 μF.

Table 3 lists several types of aluminum electrolytic capacitors that could be used for the output filter. Use the following parameters to select the capacitor:

Working Voltage (WVDC): Choose a capacitor with a working voltage at least 20% higher than the regulator output voltage.

Ripple Current: This is the maximum RMS value of current that charges the capacitor during each switching cycle. For step-up and flyback regulators, the formula for ripple current is:

$I_{RIPPLE(rms)} = (I_{LOAD(max)} \times D_{max})/(1 - D_{max})$

Choose a capacitor that is rated at least 50% higher than this value at 100 kHz.

Equivalent Series Resistance (ESR): This is the primary cause of output ripple voltage, and it also affects the values of R_C and C_C needed to stabilize the regulator. As a result, the preceding calculations for C_C and R_C are only valid if the ESR does not exceed the maximum value specified by the following equations.

$ESR \leq (0.01 \times 15\ V)/I_{RIPPLE(P-P)}$ and $\leq (8.7 \times 10^{-3} \times V_{IN})/I_{LOAD(max)}$ where

$I_{RIPPLE(P-P)} = (1.15 \times I_{LOAD(max)})/(1 - D_{max})$

Select a capacitor with an ESR, at 100 kHz, that is less than or equal to the lower value calculated. Most electrolytic capacitors specify ESR at 120 kHz, which is 15% to 30% higher than at 100 kHz. Also, note that ESR increases by a factor of 2 when operating at –20°C.

In general, low values of ESR are achieved by using large-value capacitors ($C \geq 470$ μF) and capacitors with high WVDC, or by paralleling smaller-value capacitors.

4. Input Capacitor Selection (C_{IN})

To reduce noise on the supply voltage caused by the switching action of a step-up regulator (ripple current noise), V_{IN} should be bypassed to ground. A good quality 0.1-μF capacitor with low ESR should provide sufficient decoupling. If the TL3577 is located far from the supply-source filter capacitors, an additional electrolytic (47 μF, for example) is required.

Table 3. Aluminum Electrolytic Capacitors Recommended for Switching Regulators

Nichicon – Types PF, PX, or PZ 927 East State Parkway, Schaumburg, IL 60173 (708) 843-7500	**United Chemi-CON** – Types LX, SXF, or SXJ 9801West Higgens, Rosemont, IL 60018 (708) 696-2000

5. Output Diode Selection (D)

In the step-up regulator, the switching diode must withstand a reverse voltage and be able to conduct the peak output current of the TL3577. Therefore, a suitable diode must have a minimum reverse breakdown voltage greater than the circuit output voltage and should also be rated for average and peak current greater than $I_{LOAD(max)}$ and $I_{D(pk)}$. Because of their low forward-voltage drop (and higher regulator efficiencies), Schottky barrier diodes often are used in switching regulators. Refer to Table 4 for recommended part numbers and voltage ratings of 1-A and 3-A diodes.

Table 4. Diode Selection Chart(1)

$V_{OUT(max)}$ (V)	Schottky		Fast Recovery	
	1 A	3 A	1 A	3 A
20	1N5817 MBR120P	1N5820 MBR320P		
30	1N5818 MBR130P 11DQ03	1N5821 MBR330P 31DQ03		
40	1N5819 MBR140P 11DQ04	1N5822 MBR340P 31DQ04		
50	MBR150 11DQ05	MBR350 31DQ05	1N4933 MUR105	
100			1N4934 MUR110 10DL1	MR851 30DL1 MR831

(1) MBRxxx and MURxxx are manufactured by Motorola.
1DDxxx, 11Cxx and 31Dxx are manufactured by International Rectifier

PACKAGING INFORMATION

Orderable Device	Status [1]	Package Type	Package Drawing	Pins	Package Qty	Eco Plan [2]	Lead/Ball Finish	MSL Peak Temp [3]
TL3577-ADJIKTTR	ACTIVE	DDPAK/ TO-263	KTT	5	500	Green (RoHS & no Sb/Br)	CU SN	Level-3-245C-168 HR

[1] The marketing status values are defined as follows:
ACTIVE: Product device recommended for new designs.
LIFEBUY: TI has announced that the device will be discontinued, and a lifetime-buy period is in effect.
NRND: Not recommended for new designs. Device is in production to support existing customers, but TI does not recommend using this part in a new design.
PREVIEW: Device has been announced but is not in production. Samples may or may not be available.
OBSOLETE: TI has discontinued the production of the device.

[2] Eco Plan - The planned eco-friendly classification: Pb-Free (RoHS), Pb-Free (RoHS Exempt), or Green (RoHS & no Sb/Br) - please check http://www.ti.com/productcontent for the latest availability information and additional product content details.
TBD: The Pb-Free/Green conversion plan has not been defined.
Pb-Free (RoHS): TI's terms "Lead-Free" or "Pb-Free" mean semiconductor products that are compatible with the current RoHS requirements for all 6 substances, including the requirement that lead not exceed 0.1% by weight in homogeneous materials. Where designed to be soldered at high temperatures, TI Pb-Free products are suitable for use in specified lead-free processes.
Pb-Free (RoHS Exempt): This component has a RoHS exemption for either 1) lead-based flip-chip solder bumps used between the die and package, or 2) lead-based die adhesive used between the die and leadframe. The component is otherwise considered Pb-Free (RoHS compatible) as defined above.
Green (RoHS & no Sb/Br): TI defines "Green" to mean Pb-Free (RoHS compatible), and free of Bromine (Br) and Antimony (Sb) based flame retardants (Br or Sb do not exceed 0.1% by weight in homogeneous material)

[3] MSL, Peak Temp. -- The Moisture Sensitivity Level rating according to the JEDEC industry standard classifications, and peak solder temperature.

Important Information and Disclaimer: The information provided on this page represents TI's knowledge and belief as of the date that it is provided. TI bases its knowledge and belief on information provided by third parties, and makes no representation or warranty as to the accuracy of such information. Efforts are underway to better integrate information from third parties. TI has taken and continues to take reasonable steps to provide representative and accurate information but may not have conducted destructive testing or chemical analysis on incoming materials and chemicals. TI and TI suppliers consider certain information to be proprietary, and thus CAS numbers and other limited information may not be available for release.

In no event shall TI's liability arising out of such information exceed the total purchase price of the TI part(s) at issue in this document sold by TI to Customer on an annual basis.

KTT (R–PSFM–G5) PLASTIC FLANGE–MOUNT PACKAGE

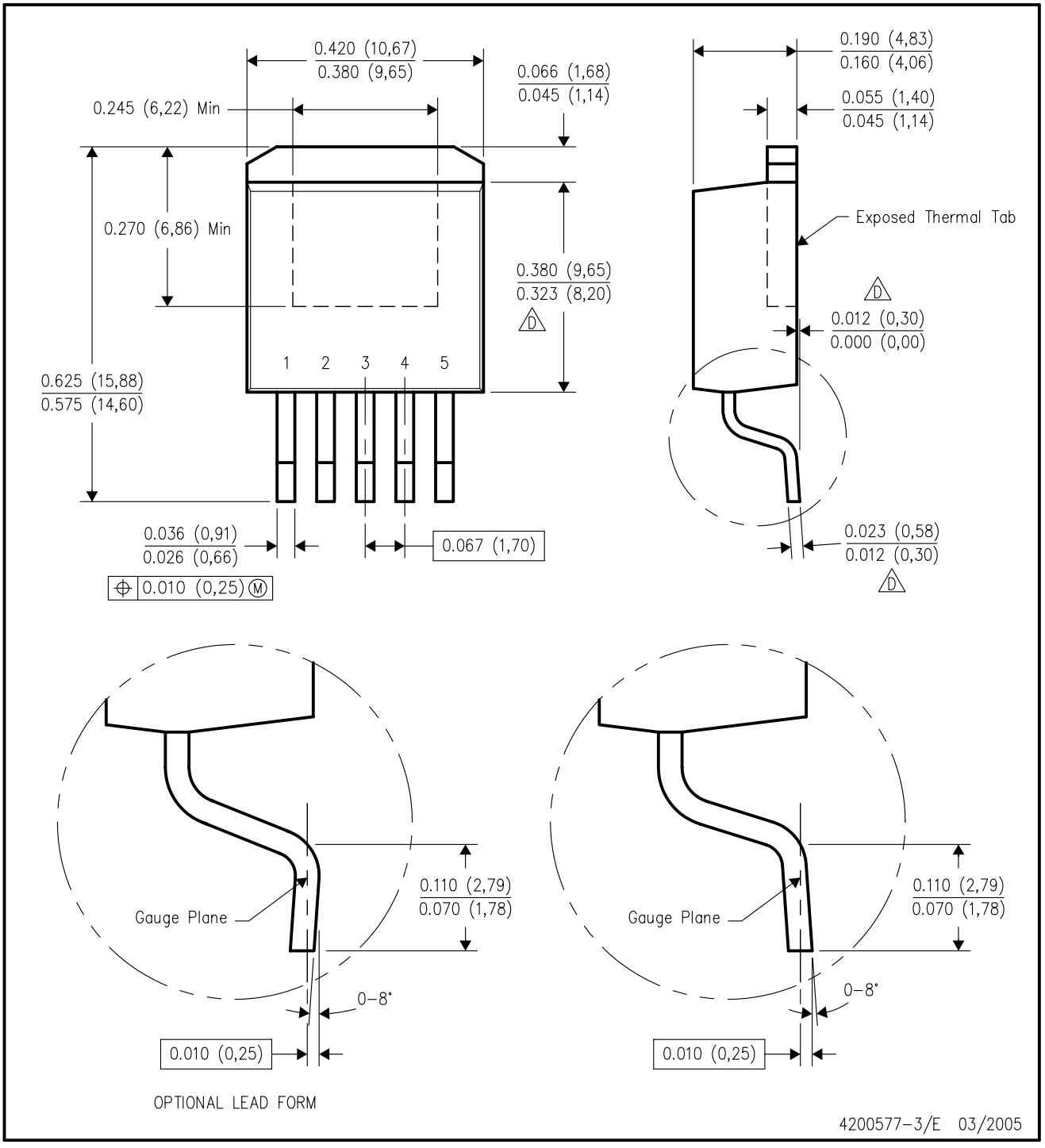

NOTES:
A. All linear dimensions are in inches (millimeters).
B. This drawing is subject to change without notice.
C. Body dimensions do not include mold flash or protrusion. Mold flash or protrusion not to exceed 0.005 (0,13) per side.
D. Falls within JEDEC TO–263 variation BA, except minimum lead thickness, maximum seating height, and minimum body length.

KTT (R–PSFM–G5)

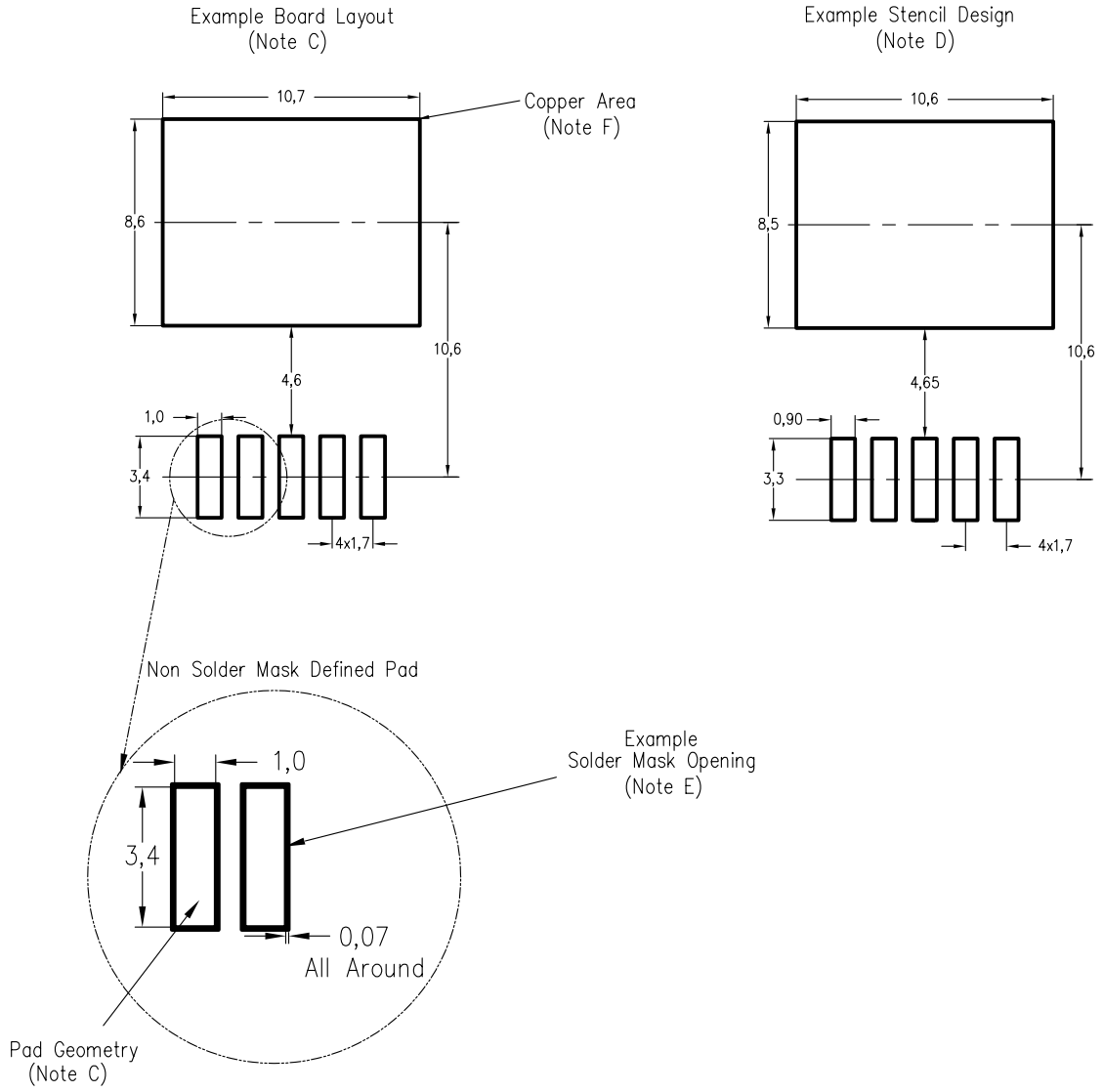

NOTES:
A. All linear dimensions are in millimeters.
B. This drawing is subject to change without notice.
C. Publication IPC–SM–782 is recommended for alternate designs.
D. Laser cutting apertures with trapezoidal walls and also rounding corners will offer better paste release. Customers should contact their board assembly site for stencil design recommendations. Refer to IPC–7525.
E. Customers should contact their board fabrication site for solder mask tolerances between and around signal pads.
F. This package is designed to be soldered to a thermal pad on the board. Refer to the Product Datasheet for specific thermal information, via requirements, and recommended thermal pad size. For thermal pad sizes larger than shown a solder mask defined pad is recommended in order to maintain the solderable pad geometry while increasing copper area.

IMPORTANT NOTICE

Texas Instruments Incorporated and its subsidiaries (TI) reserve the right to make corrections, modifications, enhancements, improvements, and other changes to its products and services at any time and to discontinue any product or service without notice. Customers should obtain the latest relevant information before placing orders and should verify that such information is current and complete. All products are sold subject to TI's terms and conditions of sale supplied at the time of order acknowledgment.

TI warrants performance of its hardware products to the specifications applicable at the time of sale in accordance with TI's standard warranty. Testing and other quality control techniques are used to the extent TI deems necessary to support this warranty. Except where mandated by government requirements, testing of all parameters of each product is not necessarily performed.

TI assumes no liability for applications assistance or customer product design. Customers are responsible for their products and applications using TI components. To minimize the risks associated with customer products and applications, customers should provide adequate design and operating safeguards.

TI does not warrant or represent that any license, either express or implied, is granted under any TI patent right, copyright, mask work right, or other TI intellectual property right relating to any combination, machine, or process in which TI products or services are used. Information published by TI regarding third-party products or services does not constitute a license from TI to use such products or services or a warranty or endorsement thereof. Use of such information may require a license from a third party under the patents or other intellectual property of the third party, or a license from TI under the patents or other intellectual property of TI.

Reproduction of information in TI data books or data sheets is permissible only if reproduction is without alteration and is accompanied by all associated warranties, conditions, limitations, and notices. Reproduction of this information with alteration is an unfair and deceptive business practice. TI is not responsible or liable for such altered documentation.

Resale of TI products or services with statements different from or beyond the parameters stated by TI for that product or service voids all express and any implied warranties for the associated TI product or service and is an unfair and deceptive business practice. TI is not responsible or liable for any such statements.

Following are URLs where you can obtain information on other Texas Instruments products and application solutions:

Products		**Applications**	
Amplifiers	amplifier.ti.com	Audio	www.ti.com/audio
Data Converters	dataconverter.ti.com	Automotive	www.ti.com/automotive
DSP	dsp.ti.com	Broadband	www.ti.com/broadband
Interface	interface.ti.com	Digital Control	www.ti.com/digitalcontrol
Logic	logic.ti.com	Military	www.ti.com/military
Power Mgmt	power.ti.com	Optical Networking	www.ti.com/opticalnetwork
Microcontrollers	microcontroller.ti.com	Security	www.ti.com/security
Low Power Wireless	www.ti.com/lpw	Telephony	www.ti.com/telephony
		Video & Imaging	www.ti.com/video
		Wireless	www.ti.com/wireless

Mailing Address: Texas Instruments
Post Office Box 655303 Dallas, Texas 75265

Copyright © 2007, Texas Instruments Incorporated